# Decorative caps for Perfecto - Matte Black

IMO

12 801 970 Product version from 10/1/2023

Fits: IMO, LULU, MADISON, MEM, TARA, CL.1, LISSÉ, VAIA, META, CYO

- 1 pair

Including retaining screws availableunder order no. 12 800 970-FF

| | |
|---|---|
| Matte Black | 12 801 970-33 |
| Chrome | 12 801 970-00 |
| Brushed Platinum | 12 801 970-06 |
| Platinum | 12 801 970-08 |
| Durabrass (23kt Gold) | 12 801 970-09 |
| Dark Chrome | 12 801 970-19 |
| Light Gold | 12 801 970-26 |
| Brushed Light Gold | 12 801 970-27 |
| Brushed Durabrass (23kt Gold) | 12 801 970-28 |
| Brushed Bronze | 12 801 970-42 |
| Brushed Champagne (22kt Gold) | 12 801 970-46 |
| Champagne (22kt Gold) | 12 801 970-47 |
| Brushed Chrome | 12 801 970-93 |
| Brushed Dark Platinum | 12 801 970-99 |

# Decorative caps for Perfecto - Matte Black

IMO

12 801 970 Product version from 10/1/2023

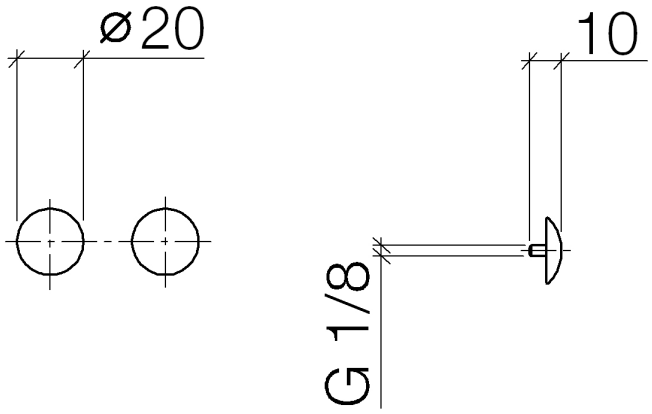

# Decorative caps for Perfecto - Matte Black

IMO

12 801 970 Product version from 10/1/2023

Parts for other
finishes can be found
here: Chrome

## Spare parts list

| No. | Item Number | Name | Quantity used | Delivery time |
|---|---|---|---|---|
| 1 | 09 30 30 060-33 | screw | 2 | 60 |